SCHEMATIC DIAGRAM

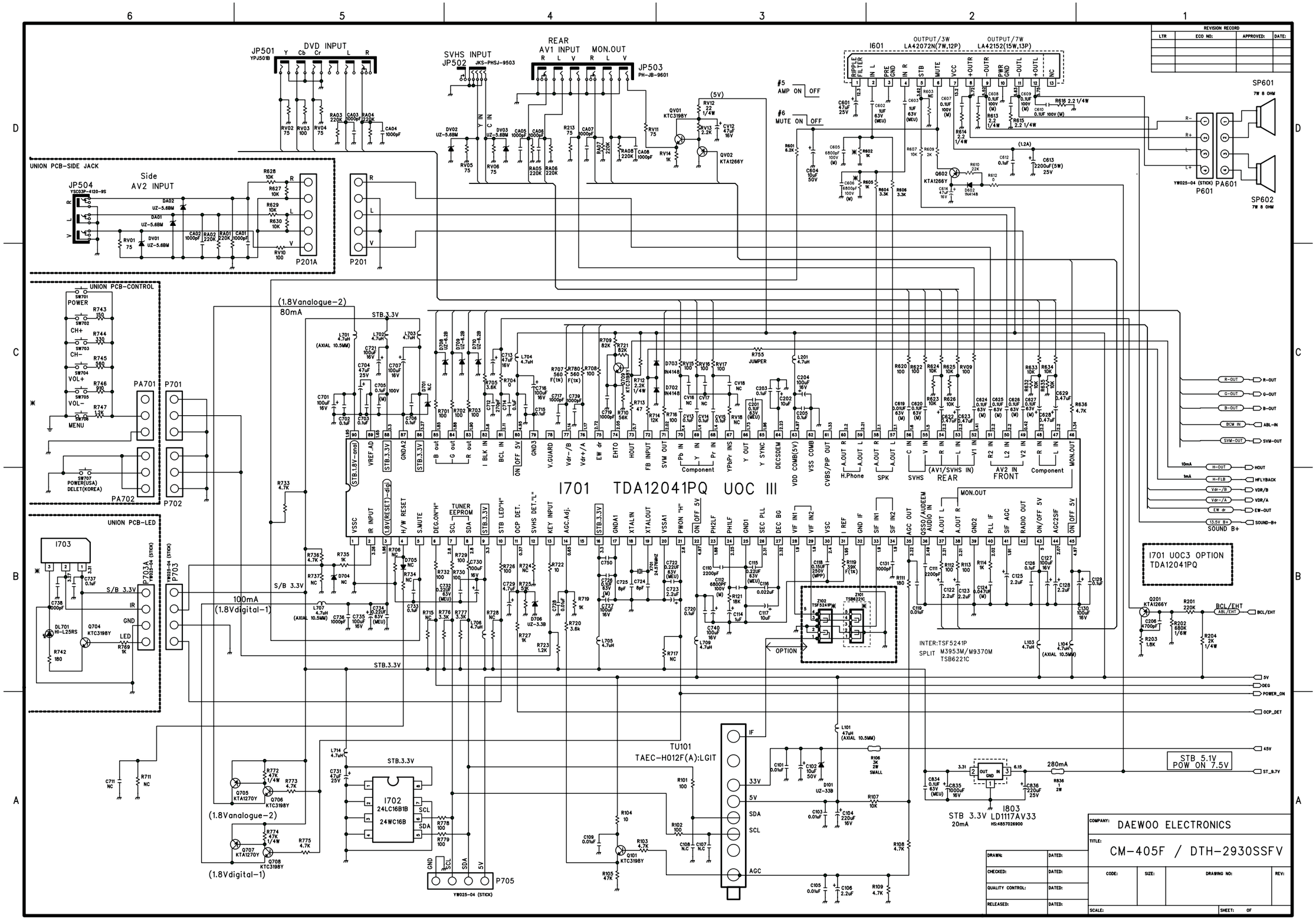

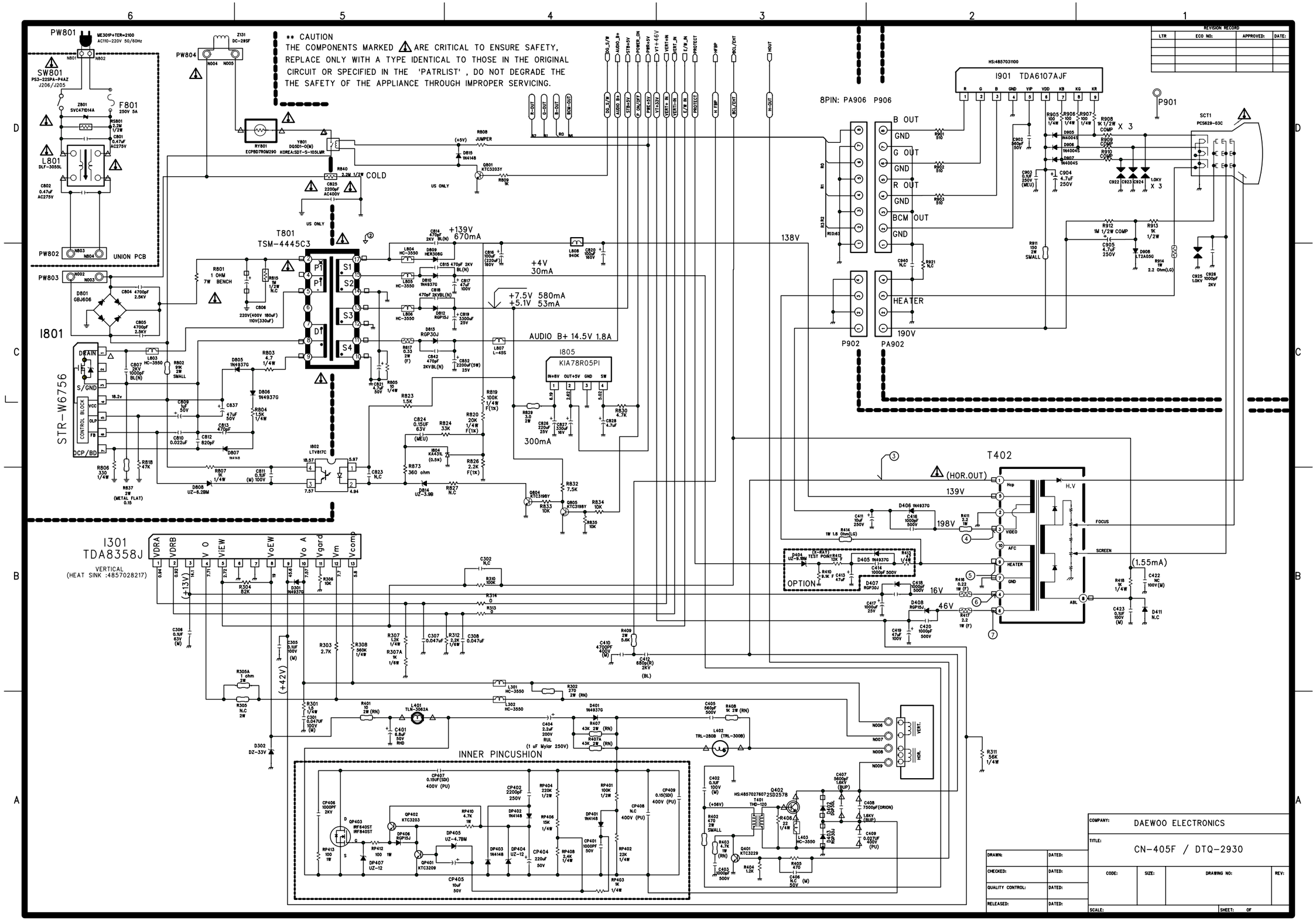
** CAUTION
THE COMPONENTS MARKED ⚠ ARE CRITICAL TO ENSURE SAFETY, REPLACE ONLY WITH A TYPE IDENTICAL TO THOSE IN THE ORIGINAL CIRCUIT OR SPECIFIED IN THE 'PATRLIST', DO NOT DEGRADE THE THE SAFETY OF THE APPLIANCE THROUGH IMPROPER SERVICING.
REVISION RECORD
LTR
ECO NO:
APPROVED:
DATE:
PW801
SW801
F801
L801
PW802
UNION PCB
PW803
PW804
I801
STR-W6756
T801
TSM-4445C3
I301
TDA8358J
VERTICAL
(HEAT SINK :4857028217)
I901 TDA6107AJF
8PIN: PA906 P906
B OUT
GND
G OUT
R OUT
BCM OUT
HEATER
P902
PA902
P901
SCT1
PC5629-03C
T402
(HOR.OUT)
H.V
FOCUS
SCREEN
OPTION
INNER PINCUSHION
Q402
COMPANY:
DAEWOO ELECTRONICS
TITLE:
CN-405F / DTQ-2930
DRAWN:
CHECKED:
QUALITY CONTROL:
RELEASED:
DATED:
CODE:
SIZE:
DRAWING NO:
REV:
SCALE:
SHEET:
OF